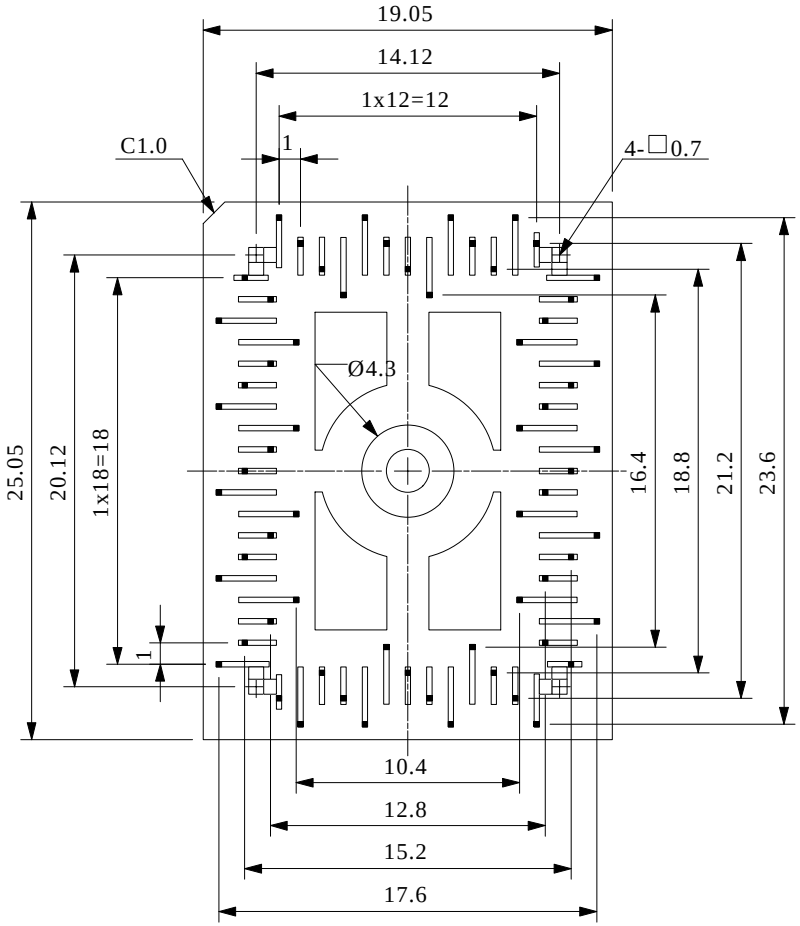

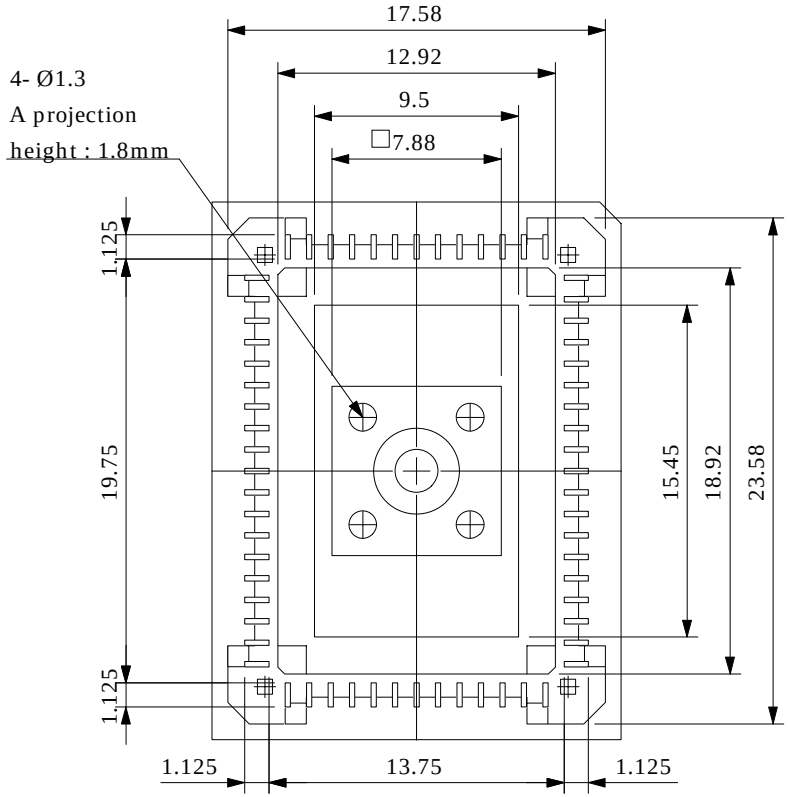

BOTTOM VIEW

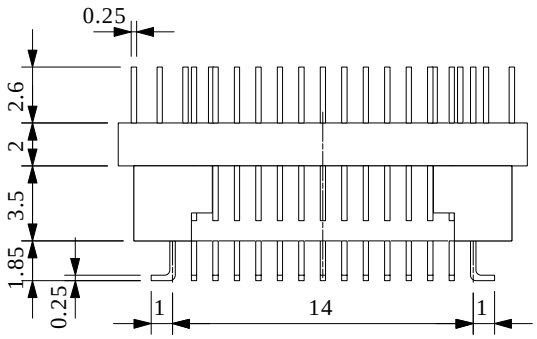

Part No.	**TQPACK064RZ**
IC package	Rectangle
Pin count	64Pin
Lead pitch	1.0mm
Unit : mm	Design : M.H
TET TOKYO ELETECH CORP.	