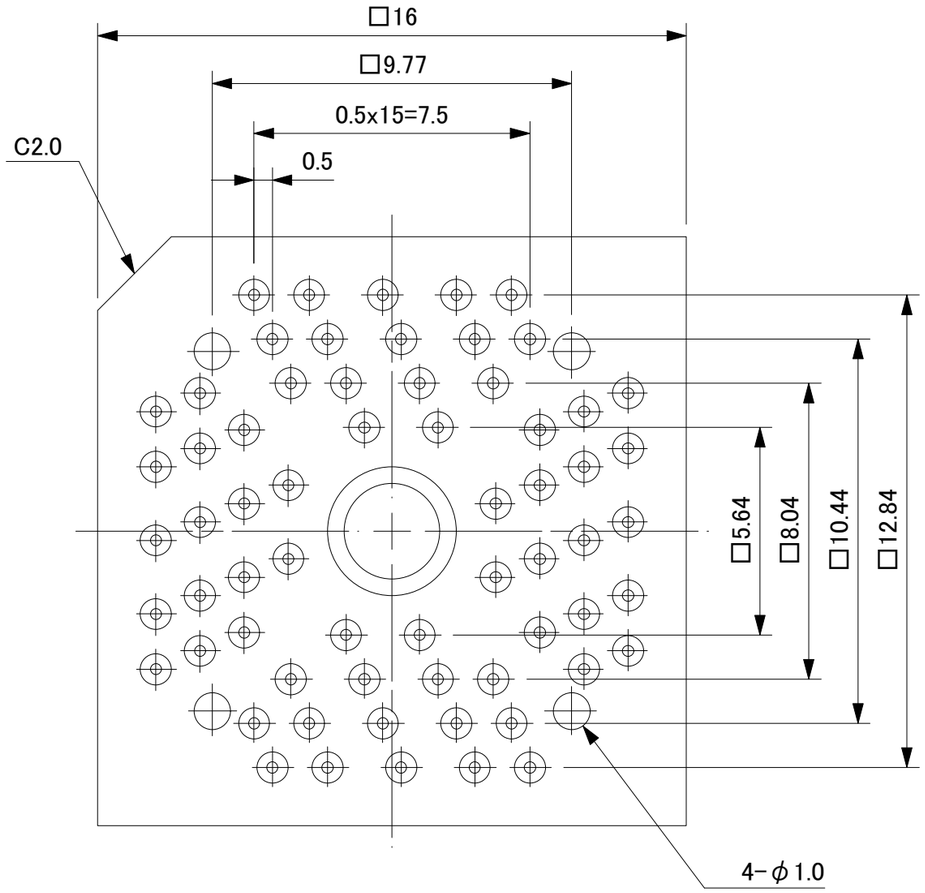

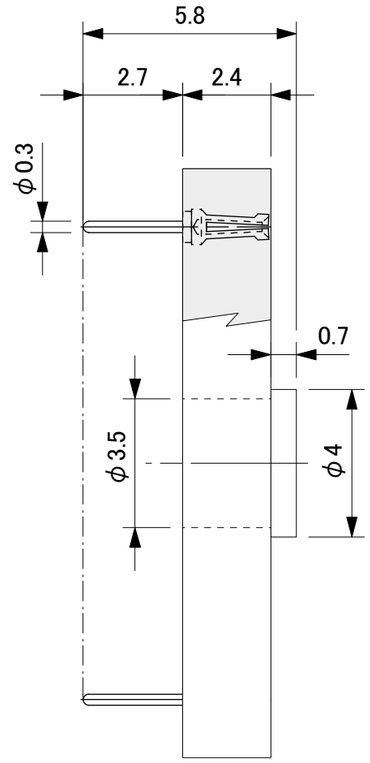

Part No.	TQSOCKET064SDF
IC package	Square
Pin count	64pin
Lead pitch	0.5mm
Unit	mm
Design / Date	S.M / Feb 18.'19
TET TOKYO ELETECH CORP.	