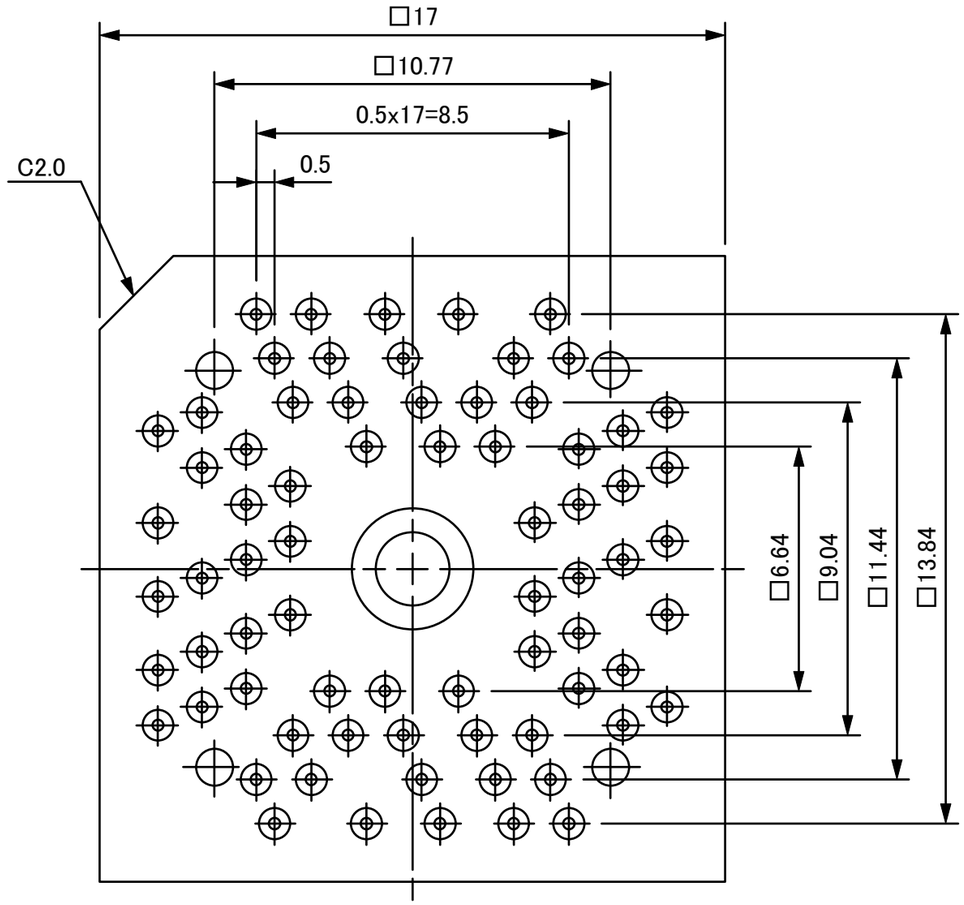

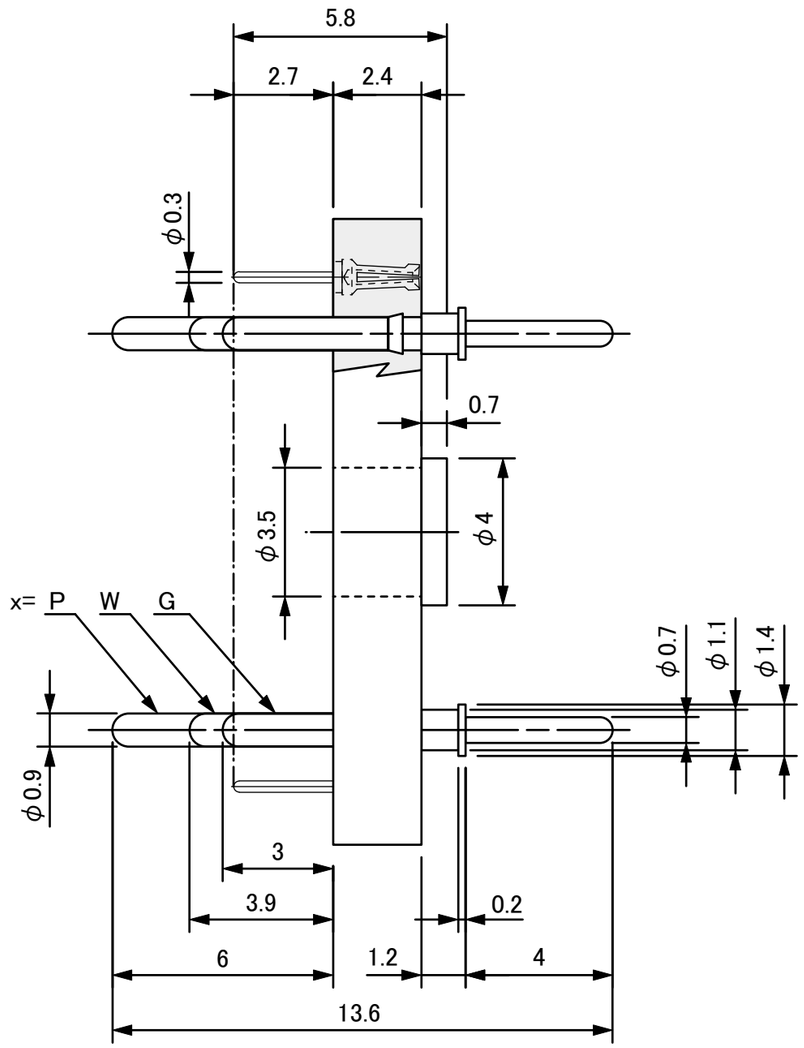

Part No.	TQSOCKET072SDx
IC package	Square
Pin count	72pin
Lead pitch	0.5mm
Unit	mm
Design / Date	S.M / Feb 18.'19
TET TOKYO ELETECH CORP.	

Guide pin
x=G,W,P